LACAVA®

AQUATRE Lavatory
Item #8071

Features:

-Double-bowl porcelain washbasin with overflow
-Vanity top installation
-Faucet hole diameter is 1 3/8"
-Recommended oversized European drain (i.e. item #7100-16OF, 7100-12, or 7100-13OF)

Recommended Accessories:

-Item #8071C: Free-standing undercounter double vanity
-Two doors on the sides and two drawers in the center
-Item #8071B: Wall-mount undercounter double vanity
-Two doors on the sides and two drawers in the center

Finish Options:

001 - White

Faucet Hole Options:

00 - None
01 - One (over each drain)
02 - Two, center and right (over each drain)
03 - Three in 8" spread (over each drain)

Product Specifications:

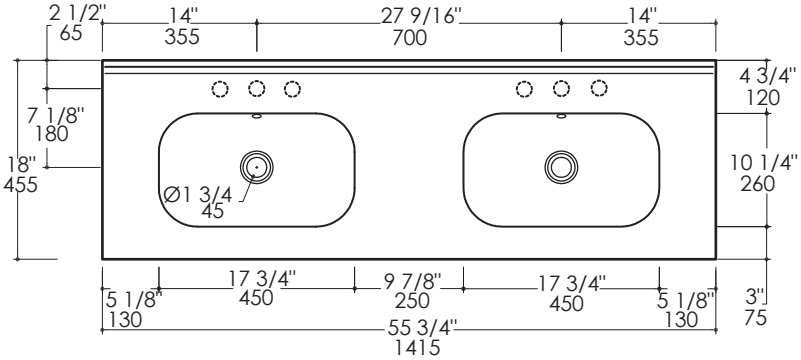

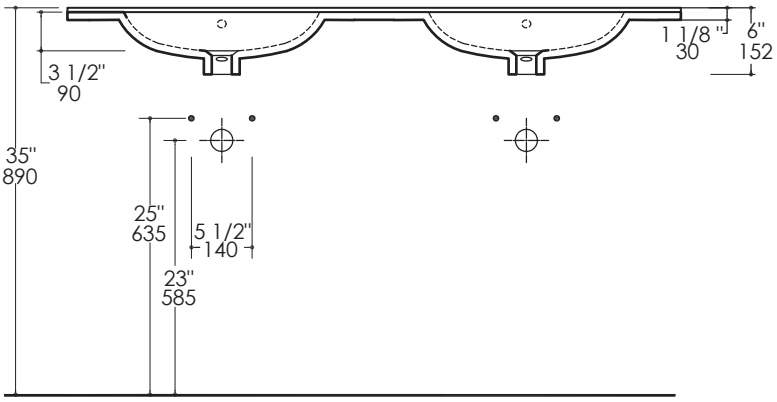

IMPORTANT:
We use very fine clay to produce select porcelain lavatories. The many benefits of fine clay include low porosity, high brilliance of glaze, as well as high durability of the material and finish. However, fine clay is subject to relatively high level of shrinkage 12-15% during firing process at extremely high temperatures reaching over 2200°F / 1200°C. This process results in unavoidable low levels of deviation from the originally intended perfect shape. Each lavatory is therefore slightly unique and closely inspected for proper fit with the accompanying vanity. LACAVA strives to ensure long-lasting beauty and performance of our sanitary ware for complete customer satisfaction.

Notes:
Drawings provided herein are meant to give the user an idea of the product and are not made to scale. The size in inches is rounded up to the nearest 1/16". Slight variances can often occur with porcelain and woodwork. Therefore, LACAVA will not be held responsible for any cutouts, countertops, or furniture made without the actual product or template from LACAVA.
Plumbing specifications are only a guideline and may need to be altered based on the application.
Product specifications are not binding to the manufacturer and can be changed without notice at any time. Please refer to your shipment for product final sizes.

LACAVA is committed to the highest level of customer service. Please feel free to contact us at 1-888-522-2823 (toll free) or by email at info@lacava.com for technical assistance or any general inquiries.

Rev. 9-18-2017

6630 west wrightwood avenue chicago il 60707 usa tel 773 637 9600 fax 773 637 9601 info@lacava.com www.lacava.com