GAGGENAU

WS 482 710
Stainless steel-backed glass front
Width 30" (76 cm), Height 8 3/16" (21 cm)

400 series warming drawer
WS 482

- Handleless warming drawer
- Bright interior light
- Cushioned closing system
- Hygienic stainless steel interior with glass bottom
- 4 temperature levels ranging from 100°F – 175°F
- Also for preparing and cooking meals
- Net volume 1.3 cu.ft.

Cooking modes
Defrosting of meals/proofing of yeast dough.
Preheating of small beverages.
Keeping meals warm/slow cooking.
Warming of ovenware.

Operation
Rotary knob operation.
Recessed grip at the front bottom of drawer.

Features
Volume capacity: Dinner set for 10 people including ø 11" plates and soup bowls, additional bowls and serving dishes depending on size.
Max. load 55 lbs.
Usable interior dimensions:
H 5 3/16" × W 23 7/8" × D 18 7/8".
Integrated heating under glass for easy cleaning.
Convection fan for even heat distribution.
Status display, visible in the glass front.
Glass bottom made of safety glass.

Planning notes
The front of the appliance extends 1 7/8" from the cabinet front.
Always use an intermediate shelf – at least 3/4" thick – when mounting a 400 series single oven/Combi-steam oven/Combi-microwave oven above the WS 482 warming drawer.
When mounting the drawer below the 400 series Combi-steam oven, plan a recess of at least 1 3/8" between the back wall and the warming drawer to allow for the inlet and outlet hose to be installed appropriately.
With a cut-out depth of 23 1/2", the electrical outlet can be planned behind the appliance.

Rating
Total rating: 810 W.
Total Amps: 15 A.
120 V / 60 Hz
Connecting cable 59" with plug.

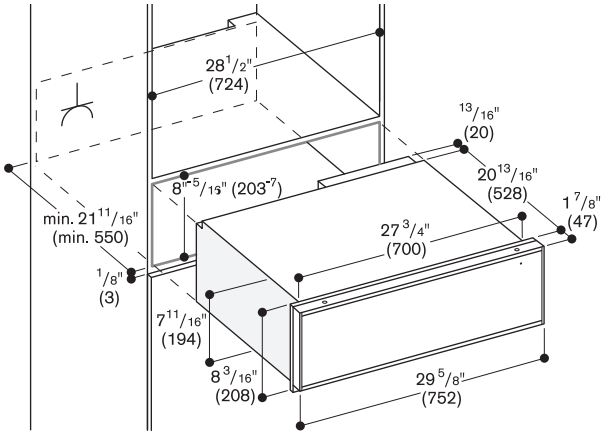

Side view of WS 482 below BO single oven

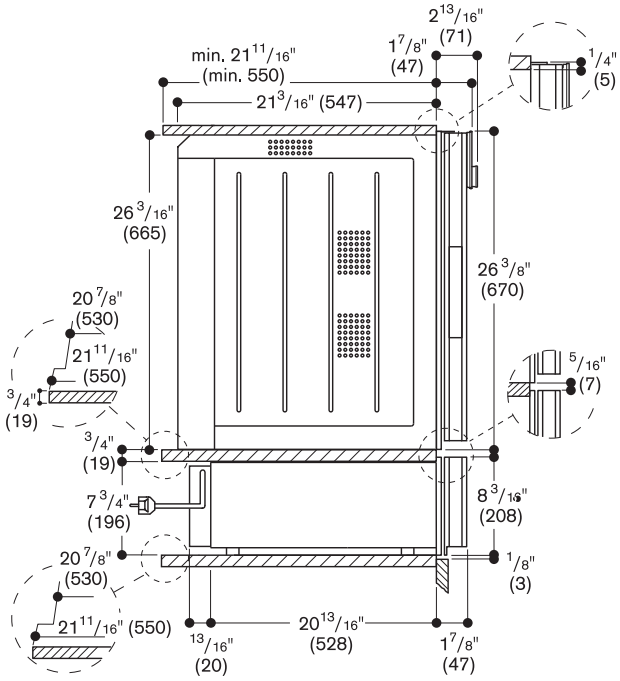

Side view of WS 482 below BS Combi-steam oven, BM Combi-microwave oven or CM espresso machine

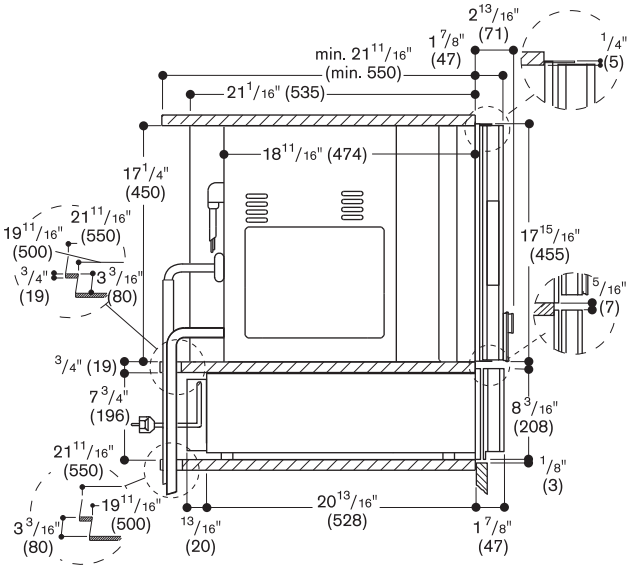

Numbers indicated inside parenthesis ( ) = mm